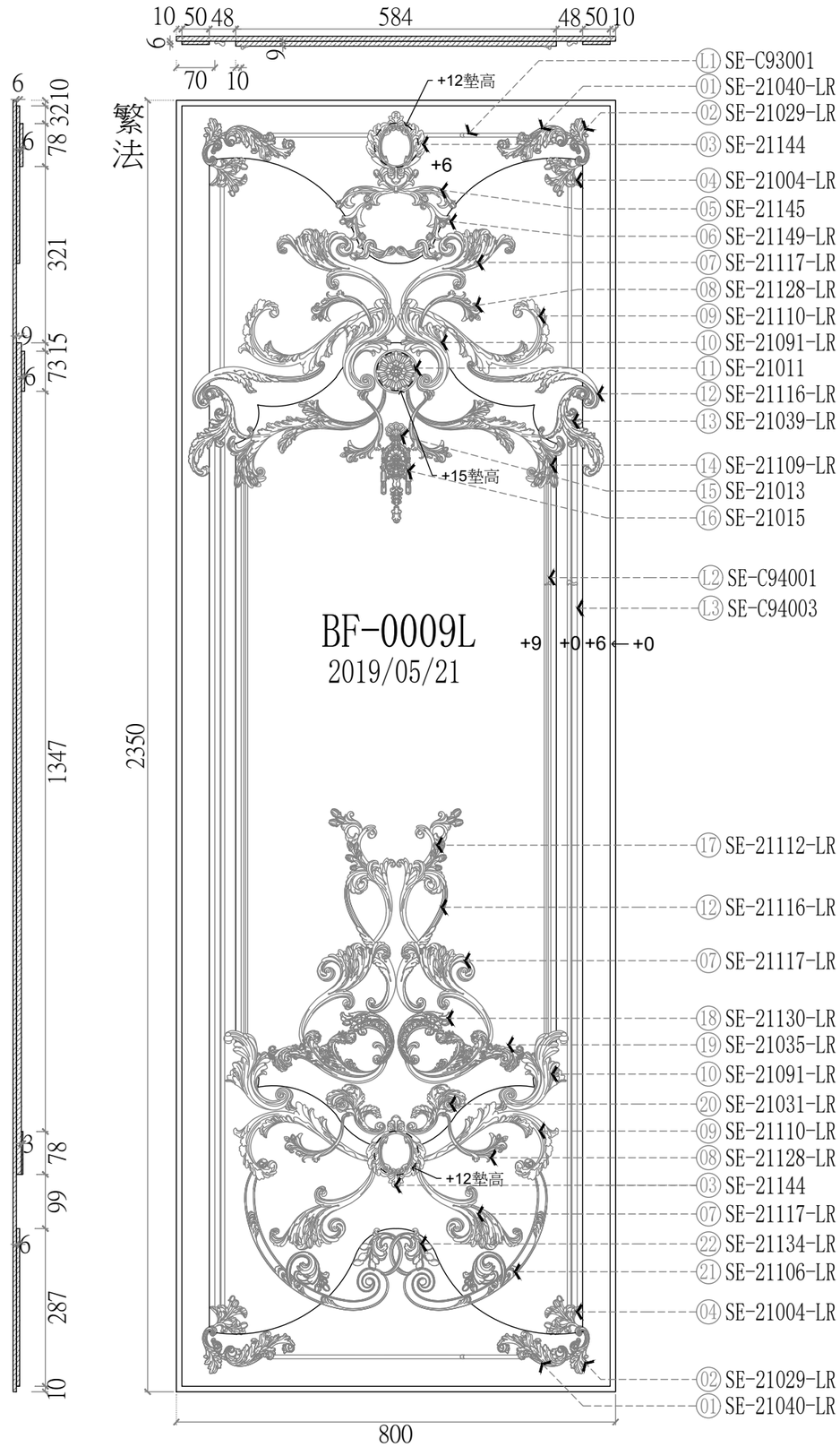

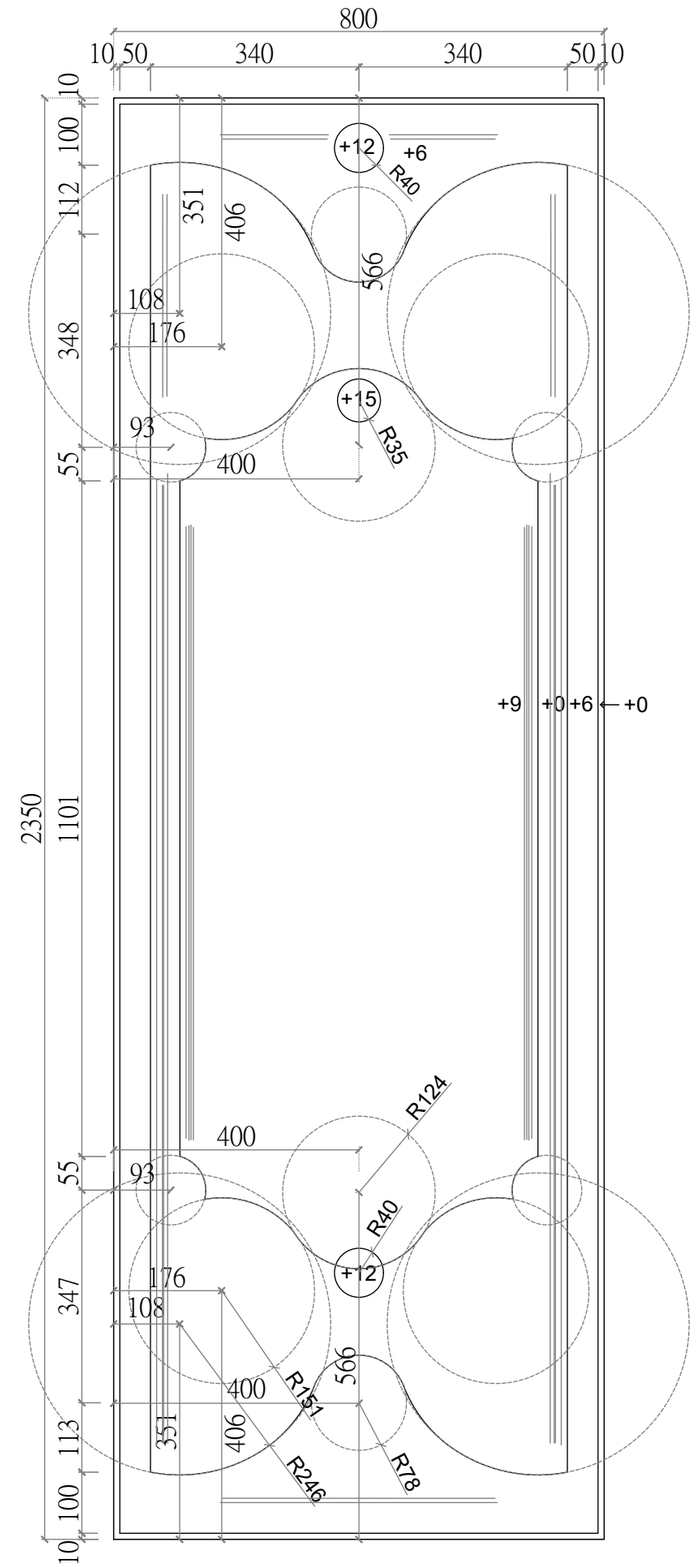

<模板> (共1組)
飾花線板貨號與數量(1組)

01	SE-21040L	2	pcs.
	SE-21040R	2	pcs.
02	SE-21029L	2	pcs.
	SE-21029R	2	pcs.
03	SE-21144	2	pcs.
04	SE-21004L	2	pcs.
	SE-21004R	2	pcs.
05	SE-21145	1	pc.
06	SE-21149L	1	pc.
	SE-21149R	1	pc.
07	SE-21117L	3	pcs.
	SE-21117R	3	pcs.
08	SE-21128L	3	pcs.
	SE-21128R	3	pcs.
09	SE-21110L	2	pcs.
	SE-21110R	2	pcs.
10	SE-21091L	2	pcs.
	SE-21091R	2	pcs.
11	SE-21011	1	pc.
12	SE-21116L	2	pcs.
	SE-21116R	2	pcs.
13	SE-21039L	1	pc.
	SE-21039R	1	pc.
14	SE-21109L	1	pc.
	SE-21109R	1	pc.
15	SE-21013	1	pc.
16	SE-21015	1	pc.
17	SE-21112L	1	pc.
	SE-21112R	1	pc.
18	SE-21130L	1	pc.
	SE-21130R	1	pc.
19	SE-21035L	1	pc.
	SE-21035R	1	pc.
20	SE-21031L	1	pc.
	SE-21031R	1	pc.
21	SE-21106L	1	pc.
	SE-21106R	1	pc.
22	SE-21134L	1	pc.
	SE-21134R	1	pc.
L1	SE-C93001	1	pc.
L2	SE-C94001	1	pc.
L3	SE-C94003	2	pcs.